Chapter 32

MAIN BEARINGS FOR ADVANCED TBMS

G. Bergling
J. Forsberg, S. Hartwig, K. Wohlwend

SKF Sverige AB, Gothenburg, Sweden
The Robbins Company, Kent, WA, USA

ABSTRACT

New, larger cutters requiring higher operating loads and thus increased cutterhead thrust, higher cutterhead speeds and more pronounced demands of maintaining high penetration rates also in mixed ground, constantly augment the loads on TBM main bearings. At the same time, the demand of a single TBM model covering a wide diameter range limits the available space for the main bearing at the smaller end. Innovative concepts and advanced methods of calculating bearing loads and lifetimes are needed to meet the demands which TBM suppliers and their customers face. This paper reviews different design approaches and covers the influence of lubrication on bearing life and condition monitoring as well.

INTRODUCTION

A Tunnel Boring Machine (TBM) advances the tunnel in an almost continuous, mechanical process by pressing a rotating cutterhead with great force against the tunnel face. The rock is crushed and spalled from the face by a number of freely rotating, so called *disc cutters* mounted on the front of the cutterhead. To withstand the reactions of the torque and the thrust exerted on the cutterhead, the machine must anchor itself into the bore by means of grippers which are pressed out hydraulically against the rock in the tunnel walls. Fig. 1 shows different gripper configurations and drive unit locations of the two main types of modern hard rock TBMs produced by The Robbins Company.

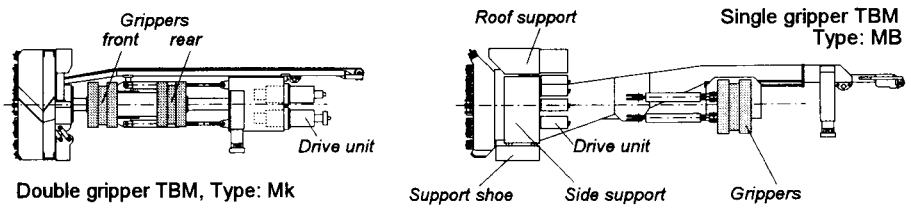

Fig. 1 Different configurations for two types of modern hard rock Tunnel Boring Machines

The difference in gripper layout also makes it necessary to – in the case of a single gripper TBM – stabilize the cutterhead by supporting it on a shoe and equip the machine with sliding side supports and a roof support. On a double gripper TBM there is no need for such supports, as the two anchoring points alone provide sufficient stability. However, no matter which method of gripping and stabilization is used, on both types of TBM the cutterhead is carried in a *main bearing* which is located immediately behind the cutterhead itself. The main bearing has the duty of allowing the cutterhead to rotate while at the same time taking the cutterhead weight and all external forces acting on the head and transmitting the thrust required to make the cutters penetrate the rock.

CUTTERS AND CUTTER FORCES

The early TBMs of the 1950s were equipped with drag bit type tools and could only excavate very soft and non-abrasive ground formations. The obvious advantages of boring a tunnel instead of excavating it by the traditional means of drilling and blasting have over the years always resulted in efforts to make the machines capable of tackling ever harder and more abrasive rock. A first important step in this direction was taken with the introduction of the rolling disc cutter in 1956 (Humber River Sewer Project, Toronto, Ontario).

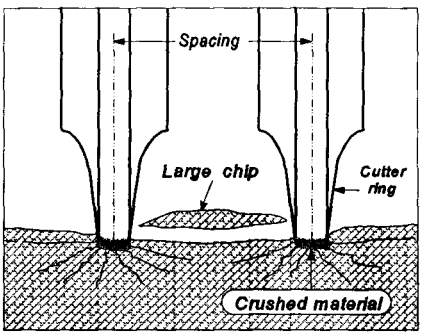

Fig. 2 Breaking rock by means of disc cutters

Because disc cutters roll *over* the material to be bored – instead of being dragged *through* it – they are much less subject to wear and their longer stand-up time thus leads to better tool economy in hard to bore rock.

The cutters are mounted on the cutterhead at a steadily increasing distance from the centre of the head, so they travel in concentric circular paths – *kerfs* – as the head is rotated against the tunnel face. In the bottom of these kerfs they produce a zone of crushed material underneath their edges under influence of the cutter load, ie of the thrust exerted on the head, see Fig. 2

Under influence of the stress induced in the rock, cracks will form from the crushed zone, extending in a radial pattern. Those cracks nearest to the free surface propagate furthest. When cracks from two adjacent kerfs meet, large chips will break away. In this manner the surface between two kerfs is lowered without any direct contact with the cutters.

When designing a TBM for a certain kind of rock, two parameters can be varied: the spacing between two adjacent cutters and the load per cutter. Spacings most often vary from some 70 m to 120 mm. By steadily increasing the size of the cutters – to accommodate larger bearings inside the cutter body – it became possible to raise the cutter load and thus to tackle harder rock. In 1980 a standard cutter had a cutter ring diameter of 12 in. and could take a load of some 120 kN. By the mid-1980s 15½ and 16¼ in. cutters capable of approximately 220 kN cutter loads had become standard. Somewhat later, 17 in. cutters were introduced which allowed 250 kN loads. The largest cutter presently available for extremely hard rock has almost 20 in. (500 mm, to be exact) diameter and can take a 350 kN load continuously.

At the same time as stronger cutter bearings were introduced, metallurgical improvements to the cutter rings – ie the part in actual contact with the rock – took place to increase their life in hard, abrasive rock such as granite, gneiss, quartzite, etc. Today, these rocks can be bored with good economy.

The sum total of the loads working on the cutters on a cutterhead equals the thrust which must be developed by the machine to press the cutterhead against the face of the tunnel. To rotate the head under this thrust load, a considerable torque is necessary which - in combination with the cutterhead rotational speed - requires substantial power. For TBMs with diameters between say 3.4 and 9.0 m it is these days not unusual to find from 1 000 to 4 480 kW capacity installed.

MAIN BEARING LOADS AND ARRANGEMENTS

In order to design a suitable main bearing for a TBM it is first of all necessary to define which forces will act on the cutterhead in various directions and secondly how large these forces are and what their duration is likely to be. Thirdly, the cutterhead speed - RPM - must be taken into account. In the fourth place, the desired life of the bearing must be factored in.

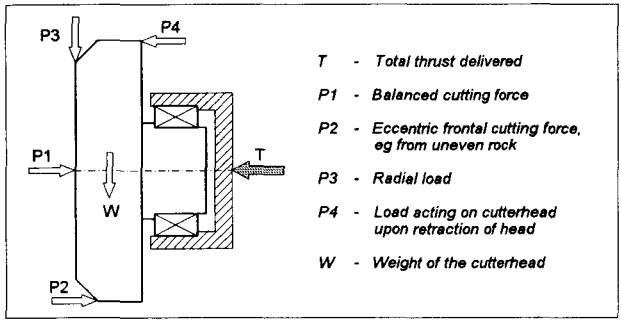

Fig. 3 The direction of various forces acting on the cutterhead

The direction of the forces and their assumed point of application is illustrated diagrammatically in Fig. 3. In practice, the total cutting force very seldom is distributed evenly over the cutterhead. A common cause is uneven hardness of the rock in the face. Also one-sided loads when steering the TBM may contribute to this phenomenon.

With the direction of the forces and their point of application established, the so called *load spectrum* can be defined; see Table 1 for an example.

	Load case					
Force	I	II	III	IV	V	VI
P1	0.9 T	0.8 T	0.7 T			
P2	0.1 T	0.2 T	0.3 T	0.4 T		0.5 T
P3	0.1 T	0.1 T	0.1 T			
P4					0.2 T	
Weight	W	W	W	W	W	W
Duration, h	18 800	1 000	200	Static loading only		
L_{10} design life: 20 000 h				Cutterhead RPM: 12.4		

Table 1 Example of a main bearing load spectrum

When calculating bearing capacity and life, one must also be aware of the fact that the total bearing load - even within a certain load case - is not constant. The inhomogeneity of the rock will lead to rapid and frequent amplitude changes in the forces acting on the cutterhead.

Early Main Bearing Designs

Initially, TBMs most often had main bearings of double row tapered roller design, the reason being that such bearings were readily available from most heavy bearing manufacturers. While these bearing can take large radial forces - both rows of rollers sharing the load - a disadvantage of the design is that the capacity for axial loads is limited, especially on the flat angled type, Fig. 4. This is a serious drawback as axial loads on a TBM main bearing always exceed the radial loads.

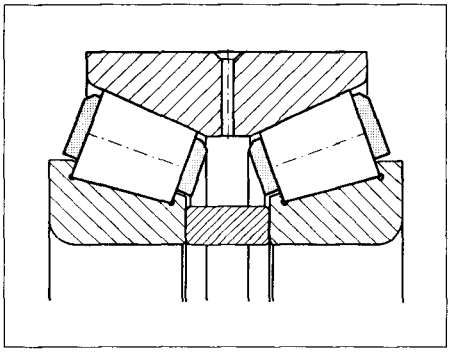

Fig. 4 Flat angle double row taper roller bearing

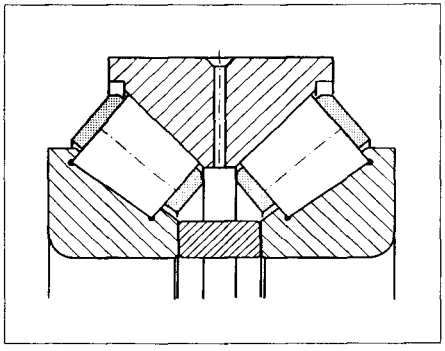

Fig. 5 Steep angle double row taper roller bearing

As thrust requirements went up, the axial load capacity was increased somewhat by tilting the rows of rollers up to a steeper angle, Fig. 5. There comes an end, though, to what can be achieved with this type of bearings. From a fatigue life point of view, the limited space for the bearing arrangement is not utilized in an optimal way - the front rollers are overloaded and the rear rollers fairly lightly loaded during operation. Life will furthermore be reduced by edge loading in the roller - raceway contacts. Even if the raceways of the rollers are given special profiles, edge loading is difficult to avoid when the very high roller contact stresses are accompanied by misalignments and deformations of the supporting bodies.

Today, the use of such bearings therefore is generally limited to small diameter TBMs with a moderate cutterhead thrust.

Modern Main Bearing Arrangements

Due to the drawbacks of the double tapered roller bearing arrangement described above and in view of steadily rising cutter loads and TBM diameters - and thus cutterhead thrust values - other types of main bearings have been introduced over the years. Here two different approaches have become visible: one is based on the use of *spherical roller bearings* of various configurations - used on the majority of Robbins TBMs of the double gripper Mk-type - the other uses *multiple row cylindrical roller bearings* for single gripper MB-type and shield type TBMs produced by the company.

While differing in geometry, both types of bearing arrangement require proper attention being paid to the supporting structure, sealing, lubrication and condition monitoring, if they are to function in a reliable manner and reach their stipulated life. These important factors will be discussed further down in this paper.

Spherical Roller Bearings

Together with SKF, The Robbins Company has developed a series of bearing arrangements consisting of spherical roller thrust bearings and double row spherical roller bearings. These have high load carrying capacities and so satisfy the demand for long life. The fact that the sphered raceways permit misalignment of the bearing seatings - caused by deformations or unavoidable manufacturing tolerances - without leading to edge stresses is also beneficial for this type of application.

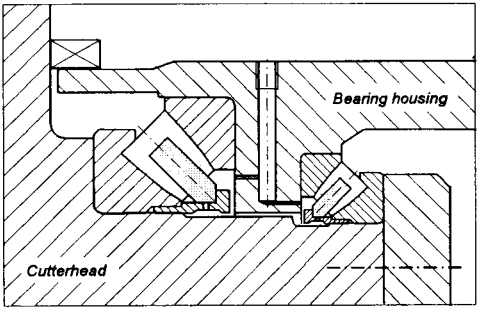

Fig. 6 Two spherical roller bearings arrangement

Fig. 6 shows two spherical roller bearings used for a Mk 18 TBM which has a diameter range of 4.5 to 6.5 m and a thrust of up to 10 500 kN. Each has been selected to fully exploit its load carrying capacity, taking into consideration the space limitations for the arrangement, the load spectrum and the desired length of life.

The front bearing - ie the one nearest the cutterhead on the left - is the more heavily loaded, as it transmits the full thrust. The rear bearing stabilizes the head against eccentric loads and serves to retain the head upon retraction. Both bearings together take the radial loads acting on the head and its weight, though the front bearing will carry the greater part thereof. The bearings are preloaded 0.3 - 0.5 mm to obtain maximum life and a stiff arrangement, free of play. Suitable bearing preloads are determined with the aid of advanced computer programs.

This bearing arrangement works satisfactorily when a relatively large outer diameter of the bearing housing in relation to the TBM diameter and applied maximum thrust can be allowed. For certain types of machines, however, space may be limited. When a high amount of thrust has to be applied in relation to the bore - and thus to the bearing housing outer diameter - the thrust bearings cannot also take the radial loads. A layout to meet such conditions is illustrated in Fig. 7 which shows the bearing arrangement used for a Mk 15 TBM, which delivers up to 10 000 kN thrust for diameters down to 3.5 m.

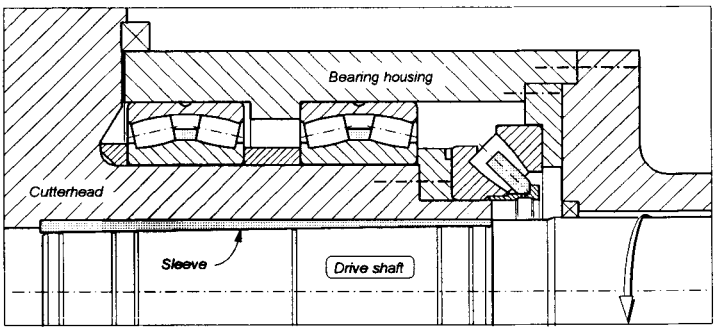

Fig. 7 Main bearing arrangement with one thrust and two radial bearings

This arrangement - Fig. 7 - shows another interesting detail. The torque is transmitted from the drive shaft via a tapered press joint with a hard fit, instead of by means of conventional keys. Mounting is simple with the SKF oil injection method: during assembly, pressurized oil is injected between the tapered contact surfaces of the joint. A specially designed hydraulic assembly tool is used to produce the force required to pull the tapered drive shaft into the internally tapered sleeve inside the cutterhead. That force is greatly reduced because the friction in the contact is almost negligible when the oil is injected. The same method is used to release the press fit joint and the injected oil safeguards the tapered surfaces from smearing when they part.

In addition, this assembly method provides advantages with respect to the bearings. To permit simple mounting and disassembly of the shaft washers of these large bearings, a loose fit is selected, though the operating conditions demand a heavy interference fit to prevent them from creeping on their seatings under influence of the rotating load. After the shaft washers are located on their seatings, the fit turns into an interference fit when the drive shaft is pulled home into the sleeve with the oil injection method: the taper forces the sleeve and the surrounding material of the cutterhead to expand, "eating up" the loose fit clearance and locking the bearing shaft washers solidly on their seatings. This arrangement is also used for the application shown in Fig. 6.

In the design of Fig. 7 the bearings are separated according to their function: they take either radial or axial (thrust) loads. Both types together deal with the so called *overturning moment* caused by eccentric loads. Another, extreme, case of separation - both according to duty and in space - is shown in Fig. 8 which illustrates the arrangement for a very large TBM - the Mk 27 - with spans a diameter range of 6.5 to 12.5 m and develops a thrust of up to 19 000 kN.

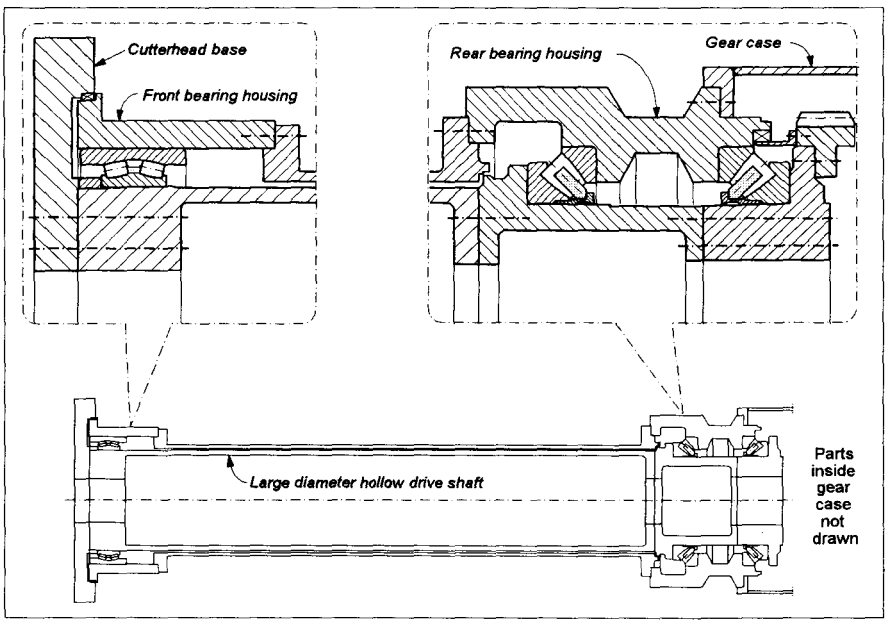

Fig. 8 Radial bearing at the front, thrust bearings at the rear of the TBM

When the bearing arrangement for this TBM was to be designed, specifications were exacting: high thrust values in combination with limited space for the smallest machine of the range. By balancing bearing design and the distance between the bearings, it was possible to meet those specifications by adopting the layout shown in Fig. 8. The radial loads acting on the cutterhead are taken by a single large spherical roller bearing mounted in the front bearing housing. The thrust – and the torque – on this machine are transmitted to the cutterhead by means of a large diameter, hollow drive shaft – external diameter 1.9 m (!) – the rear end of which is carried in a package consisting of two spherical roller thrust bearings located in the rear bearing housing which is integrated with the main gear case of the drive unit. The front one of these two bearings transmits the full thrust to the drive shaft rear end. The rear bearing takes the axial load when the cutterhead is retracted and carries the radial load generated by the weight of the ring gear which transmits the torque to the drive shaft.

In this arrangement, the rear thrust bearing is loaded much less than the front one and will thus see less life reduction as well. As the two bearings nonetheless are identical, they can change places when the TBM is overhauled and thus considerably lengthen the life of the package.

An interesting detail concerns the design of the radial bearing at the front. Due to the machine's large thrust force and the considerable length of the drive shaft, the shaft will be compressed a fraction, when the thrust is applied. As the radial bearing cannot take any axial loads, the change in length of the drive shaft is accommodated by letting that bearing follow the longitudinal movements of the drive shaft: the bearing outer ring can slide in the front bearing housing. That is why it has been given such an unusually large width. With a width of standard proportions, it would have had a tendency to tilt and might have locked itself in the bearing housing and thus would not have been able to follow the drive shaft contractions and expansions.

The inner ring of the front bearing and the shaft washers of the two thrust bearings at the rear are mounted with an interference fit on a slightly tapered seating. Pressurized oil facilitates mounting the bearings and taking them off their seatings again when necessary.

Multiple row cylindrical roller bearings

This type of bearings is also known as *slewing bearings,* as they often are used in the slewing mechanism of cranes, excavators and the like, which allow the superstructure of such machines to be swung around a vertical axis in relation to the base or the carrier. For a TBM the axis of rotation is horizontal, of course, but the overall layout of a multiple row roller main bearing otherwise is very similar to that of a slewing bearing.

Each of the three rows of rollers has a specific function in that they carry a specific load. In that they remind of the arrangement shown in Fig. 7, though multiple row roller bearings combine the different functions in one and the same bearing, while two or more bearings must be used if the spherical roller type is favoured for each function.

In multiple row roller bearings the rollers in each row can be sized for the specific load they must carry according to the load spectrum mentioned earlier. One thus will generally see large size rollers to take the thrust, smaller ones to deal with the radial forces and small rollers, too, to cope with loads generated by the overturning moment – due to eccentric loads acting on the cutterhead – and by forces possibly occurring during retraction of the cutterhead.

As slewing bearings lack the self-aligning properties of spherical radial and thrust roller bearings, they will be prone to edge loading when eccentric forces are applied to the bearing. To counteract this, the bearing rings must be of very sturdy proportions and also the supporting structure for the bearing rings

has to be very stiff, to counteract any tendency of deformation in the bearing. These aspects and further peculiarities of the general layout of a multiple type roller bearing are shown in Fig. 9 below.

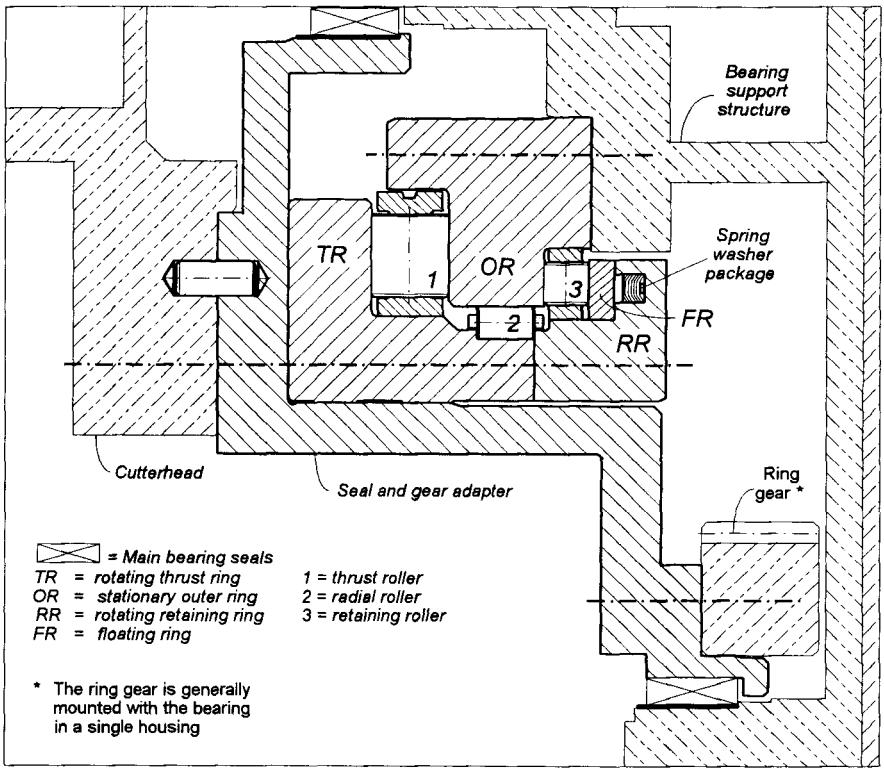

Fig. 9 Layout of a typical multiple cylindrical roller main bearing

The bearing comprises a number of rings:

- the stationary outer ring - OR - which is bolted to the supporting structure of the bearing/ring gear housing; it forms the rear raceway for the thrust rollers and the front raceway for the retaining rollers;
- the rotating thrust ring - TR - with the front raceway for the thrust rollers;
- the retaining ring - RR - with a floating ring - FR - mounted thereon which forms the rear raceway for the retaining rollers.

The floating ring is pressed forward by a number of spring washer packages to make sure it retains contact with the retaining rollers. Without this arrangement, the retaining rollers might lose contact with their raceways when the thrust is applied, as there is slight axial play in the bearing when the thrust ring and the retaining ring are clamped together. With contact lost, the retaining rollers might stop rotating and would then develop flats on their cylindrical surface. In a severe case, those flats would also damage the raceways and stop the rollers from rotating after they regain contact.

It has already been mentioned that cylindrical roller bearings lack the self-alignment feature of the spherical radial and thrust roller bearings. Though easier to manufacture in one way – all raceways of the rings being flat and thus allowing production by relatively simple turning and grinding operations – the design nevertheless necessitates careful manufacture to assure that all raceways line up properly in relation to each other when the bearing is assembled.

Another drawback of the use of cylindrical rollers is that those rollers which have their axis of rotation at right angles to the bearing's axis of rotation – ie the thrust and the retaining rollers – cannot roll true. The part of the roller furthest away from the bearing's axis of rotation has to cover a somewhat longer distance than the part of the roller which is closest to that axis. In other words, such rollers will have to skid along the length of their cylinder. This will inevitably lead to somewhat higher running temperatures and a risk of wear of rollers and raceways in the presence of dirt or when the oil film is too thin.

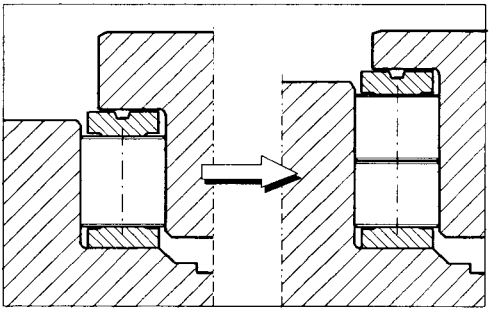

Fig. 10 Double thrust rollers to reduce skidding

For this reason, thrust rollers on the heavier loaded bearings – which have to be longer to keep line pressure along the contact within reasonable limits – are sometimes parted halfway: this reduces the amount of skidding, see Fig. 10.

BEARING LUBRICATION AND SEALING SYSTEMS

Lubrication

To function properly and reach their desired life, TBM main bearings must be lubricated. For bearings which carry a limited load – such as the double tapered roller bearings of small machines – lubrication by means of grease automatically pumped into the bearing cavity at regular intervals when the machine is in operation will be sufficient in most cases.

For large size, heavily loaded TBM main bearings which rotate at low speeds, the lubricity of grease may not be sufficient. To build up the required oil film thickness, a high viscosity of the base oil in the grease is needed and most of such greases have too low an oil bleeding capacity – especially so when the machine after start up is running at a low temperature.

Oil starvation with thin oil films and metallic contact between rollers and raceways then occurs, with reduced bearing life as a result. In the section *Bearing Life* below, the importance of the oil film thickness on bearing life is demonstrated. The contacts between rollers and the flange raceway also require good lubrication. For main bearings of large size TBMs, oil lubrication is therefore to be recommended. For spherical roller thrust bearing applications it is required.

Splash lubrication by means of oil contained in the bearing housing represents the simplest form of oil lubrication. In order to improve bearing life, it is also recommended to *combine* the oil reservoir *with an oil circulation system* provided with filters. These filters clean the oil bath which can also – if needed – be cooled if the circulating system is equipped with a heat exchanger.

During low-temperature start up the filters must be by-passed, so that also the upper parts of the bearing, above the oil bath, will receive sufficient lubrication under those conditions.

An example of such a system - which uses the bearing housing as the sump and offers simple and effective possibilities to monitor the system and shut the machine down in the case of a lubrication malfunction - is shown diagrammatically in Fig. 11. This schematic is self-explanatory.

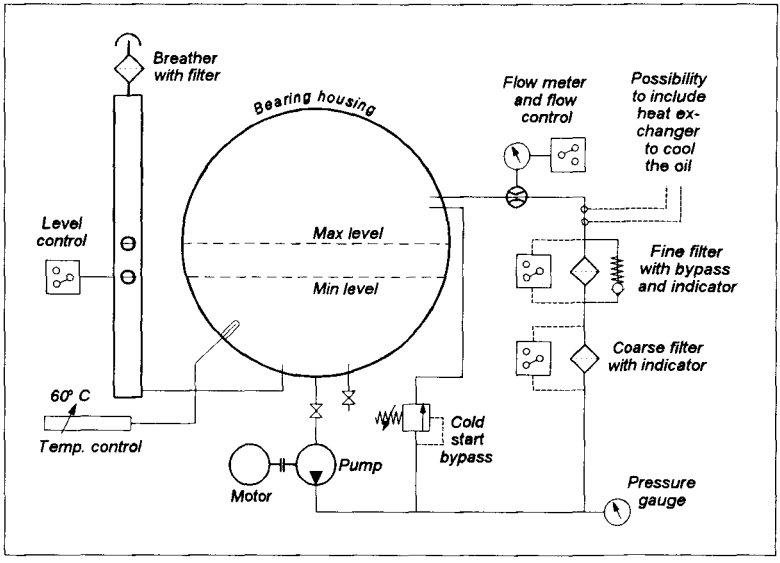

Fig. 11 Main bearing oil circulation system

Sealing

As will be shown further down, contaminants influence bearing life to a significant extent. There is thus very little point in providing a bearing with an elaborate lubrication system unless it at the same time is sealed to keep outer contaminants - in the form of dust and water in various mixtures - out of the bearing housing. Simultaneously, the sealing system must contain the lubricant inside the housing.

The importance of a reliable sealing system is clearly shown by the fact that the majority of bearing failures start either through a loss of lubricant or by the entry of contaminants from outside. No matter how its starts, any main bearing failure is a very costly mishap.

This is perhaps not so much due to the pure cost of a replacement bearing, which in itself is far from negligible. Of far greater influence, however, is the fact that the exchange usually takes anywhere from 4 to 6 weeks, during which period no productive work is done, while the fixed costs of the idling site keep clocking up.

The great care exercised in designing a suitable sealing system for a main bearing is shown by the example illustrated in Fig. 12. From the inside outwards the following seals have been installed:

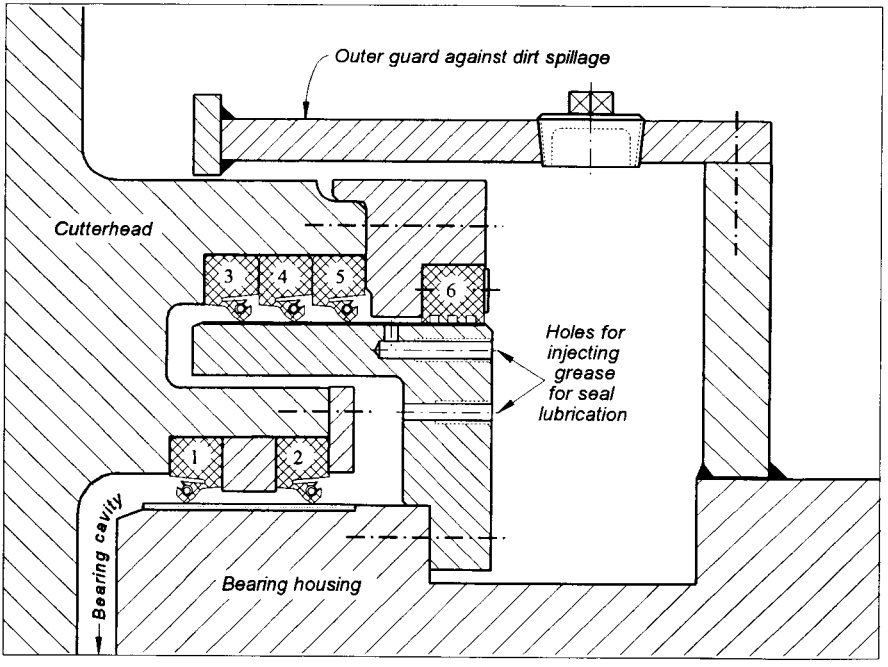

Fig. 12 A typical main bearing sealing arrangement

- 1 is a seal which has its lip turned towards the bearing cavity. This seal serves to keep the oil inside the bearing cavity.
- 2, an identical seal, the lip of which faces the opposite way. This seal thus serves to keep contaminants from entering the bearing cavity and is the innermost of the dirt seals. Both seals 1 and 2 run on a hardened sleeve which is shrunk onto the front end of the bearing housing, to prevent them from wearing a groove into the softer material of the housing itself.
- 3, 4 and 5 are three further dirt seals with their lips facing outwards. These seals are mounted at a greater distance from the machine centre line and their lips run on the hardened surface of a ring bolted to the bearing housing as shown.
- 6 is the so called *labyrinth seal* which runs on the same hardened surface as seals 3 to 5.

The seals are manufactured of a rubber compound. As their lips run at fairly high speeds against the sealing surface – approximately 1.5 m/sec – they would run hot and wear out in a very short time if they were not lubricated. The innermost seal, facing the oil in the bearing cavity, receives its lubrication from that oil and thus is out of danger. The other seals in this particular design are lubricated by grease which automatically and continuously is pumped into the seal cavities through the holes indicated.

The seal cavities thus will be filled with grease. This in itself will trap any contaminants seeking entry from outside, blocking the way to the inner regions. The surplus grease can escape outwards – the seal lips are oriented "with the flow", ie they will lift slightly to release an inner over-pressure – and the constant migration of grease outwards helps to purge the area underneath the lips of the seals from foreign material.

The labyrinth seal interfaces directly with the outer environment and thus is the one most prone to wear caused by dirt and water. To shield it in the best possible manner, an outer guard provides protection over the top half of the bearing housing where dirt is likely to accumulate into the area immediately underneath the hopper of the TBM's muck conveyor. To be able to regularly blow or wash this area clean, a number of easily removable plugs are mounted in the guard strip extending over the cutterhead.

Instead of filling the seal cavities and lubricating the seal lips with grease, an alternative method of achieving the same purpose of lubrication and keeping dirt and water out can also be used. It consists of blowing an air-oil mist in through the holes indicated for seal greasing in Fig. 12. The oil lubricates the seal lips, the air puts the seal cavities under a slightly higher than atmospheric pressure - preventing the ingress of contaminants from the outside - and the escaping air flushes any dirt from the seal running surfaces.

BEARING LIFE

The elaborate measures for sealing main bearings against contaminants described above reflect the importance attached to clean running conditions. In their latest General Catalogue of 1989, SKF presented a New Life Theory (NLT) which makes it possible to factor in contamination into fatigue life calculations.

Bearing material today has reached such high levels of purity that a bearing, under ideal conditions, can practically last indefinitely, if the bearing load is below a certain limit value which is called the *fatigue load* P_u of the bearing. The influence of a "clean" bearing steel is also included in the theory.

The influence of the purity of the lubricant and of the bearing fatigue load P_u can be calculated by means of the new *life formula*

$$L_{10aa} = a_{SKF} (C/P)^p$$

The basic *dynamic load rating* C, the *equivalent dynamic bearing load* P and the *exponent* p have not been changed from the earlier formula to calculate bearing life.

The new *factor* a_{SKF} is a function of:

- the oil film thickness, expressed by the viscosity ratio κ. Optimum conditions with full oil film separation correspond to $\kappa = 4$. It is recommended to strive for κ-values larger than 1;
- the bearing loads P_u and P mentioned earlier;
- the *contamination factor* η_c.

The contamination factor η_c

The contamination factor η_c varies between 0 for extremely contaminated conditions and 1 for very clean, laboratory conditions. With experience one can estimate suitable values for η_c, but is expedient to determine this complex factor with the aid of a PC-program SKF has developed in order to carry out life calculations according to the NLT in an easy way. The calculation is also available to customers in a PC-program called SKF CADalog C. The program is designed in such a manner, that one inputs certain data and defines the operating conditions by answering a number of program-generated questions.

The η_c calculations are based on the following parameters:

- the oil film thickness, expressed by the viscosity ratio κ;

- the size of the largest and most dangerous particles; this can be inserted directly as the result of an oil analysis or calculated by the program, based on certain input values;
- the hardness of the most dangerous particles;
- the mean diameter of the bearing;
- the fatigue load P_u and the equivalent load P;
- the contamination balance, ie:
  - contamination of the system after assembly
  - contamination which penetrates to the bearing during operation
  - contamination produced in the system
  - contamination removed from the system.

Example

As an example, the PC-program has been applied to the thrust bearing package at the rear end of the Mk 27 TBM, see Fig. 8. Two spherical roller thrust bearings 293/1600 EF are mounted here. Table 2 presents the result of the calculation. All data required for the calculation are shown in the Table.

Application: TBM Mk 27 - Bearing: 293/1600 EF

d	= 1 600 mm	P	= 20 100 kN
D	= 2 280 mm	n	= 4 rpm
C	= 68 800 kN	L_{10h}	= 31 300 h
P_u	= 11 800 kN	HV	= 700

Case	Lubrication method	Viscosity at 40° C mm^2/s	Filtration		D_p μm	Results				Remarks regarding cleaning method
			rating μm	ratio β		κ	η_c	a_{SKF}	L_{10aah} h	
1	Oil bath, splash	220	-	-	90	0.68	0.11	0.19	6 000	Careful cleaning and simple flushing after assembly
2	Oil bath, splash	710	-	-	90	2.2	0.34	0.46	14 400	Careful cleaning and simple flushing after assembly
3	Off-line filter β_{12} = 200	710	12	200	40	2.2	0.82	0.94	29 500	Careful cleaning and simple flushing after assembly
4	Off-line filter β_{12} = 200	710	12	200	40	2.2	0.82	0.96	29 900	Thorough flushing with filter β_6 = 200 after assembly
5	Off-line filter β_{25} = 200	710	12	200	60	2.2	0.77	0.90	28 000	Careful cleaning and simple flushing after assembly

Table 2 Fatigue life calculation results with a view to contamination

Two types of mineral oil have been assumed in the example: one with a viscosity of 220 mm^2/s at 40° C and the other with a viscosity of 710 mm^2/s at the same temperature. In all Cases, an oil bath is used, but for Cases 3 - 5 in the Table the oil bath is cleaned by off-line filters.

Assembly has been assumed to take place under the unfavourable conditions of cleanliness which exist when large bearings are mounted and exposed in draughty premises during long periods. Thorough cleaning of the large bearings and housings is difficult to carry out, but if large and hard particles are removed, fatigue life will not be affected to any great extent. This is evident when a comparison is made between Case 4, where thorough flushing through a 6 μm (β_6 = 200) filter is used, and Case 3, which assumes the common approach of careful cleaning and simple flushing. The calculated life is only slightly improved by the more elaborate method (Case 4).

It is important to keep contamination from the adjacent gear case – where especially initially numerous wear particles are produced by the meshing ring gear and pinions – away from the bearings. That is why the rear bearing housing and the gear case each have their own lubrication system, with a seal in between the two cavities, see the right hand enlarged section in Fig. 8.

Conclusions

For the different calculations of the example above, the oil viscosity has been varied and different filters have been used during off-line filtering. It can be seen from the Table, that increased oil viscosity has a significant influence on life, due to the increased oil film thickness, as represented by the κ value.

Also the reduction in number and size of large particles – by using off-line filtration – has considerable influence. Comparing Cases 3 and 5, however, one sees that, for this large type bearings, the finer 12 μm filter does not contribute so much more to a longer life than the coarser 25 μm filter.

As the Table shows, the advantage of the NLT is that the results from different combinations and procedures can easily be compared and that it is possible to find an optimal solution. Thus one can see, that because of the very heavy load P – almost twice the fatigue load P_u – one cannot expect to reach a_{SKF} values above 1. The most appropriate solution is Case 5, for which an oil viscosity of 710 mm^2/s at 40° C is selected, together with 25 μm off-line filtration and flushing the bearing as well as possible, but without using the most thorough procedure of flushing with 6 μm filtration after assembly. The latter method is also difficult to apply effectively for this large size bearing.

The calculated life then becomes 28 000 hours, a great increase from the worst alternative of only 6 000 hours in Case 1 with simple splash lubrication and an oil with the low viscosity of 220 mm^2/s at 40° C.

BEARING CONDITION MONITORING

As has been pointed out earlier in this paper, failure of a TBM main bearing will cause considerable downtime and high costs. The possibility of installing a reliable systems for monitoring such bearings' condition has therefore been discussed on various occasions in the past.

However, the problem has been that available monitoring systems – which are based on increased vibration levels of bearings when the raceways are damaged – have been unable to detect bearing defects at the slow rotational speeds of TBM main bearings. The vibration they cause is masked by structural vibrations and noise and vibrations from other sources.

It was not until SKF developed the Spectral Emitted Energy (SEE) technology that it became possible to detect and identify early defects of main bearings. With this technique, only very high frequency vibrations – within the 250 - 350 kHz range – are measured. In reality, the *acoustic emission* is recorded when a very small raceway defect breaks the oil film, see Fig. 13.

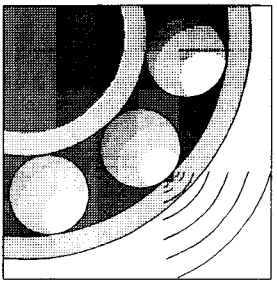

Fig. 13 Ultrasonic noise

By measuring only the very high frequencies, monitoring is not affected by structural resonances and other "machine noise" which occur in the lower frequency ranges. Besides, the recorded signals are enhanced by *enveloping*. The object of enveloping is to filter out the low frequency signals and to enhance the *repetitive* components of the bearing defect signals. Non-repetitive signals are suppressed.

For analysing the enveloped signals and for comparing the amplitude of signals from measurements at different points in time, so called *Fast Fourier Transformation* (FFT) spectrum analysis is practised.

This means that the high frequency signals are broken down into specific amplitudes at various component frequencies. By this process the amplitudes found at different frequencies are shown very clearly, see Fig. 14. These frequencies lie - after the transformation - in the low frequency range, so that it is possible to study frequencies which are interesting from a bearing defect point of view.

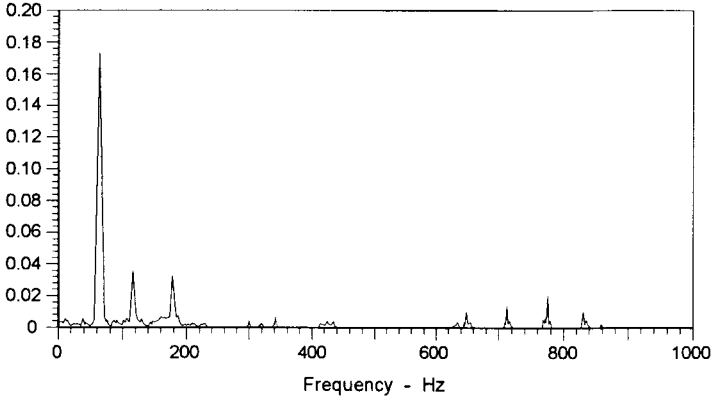

Fig. 14 Example of a typical FFT spectrum

The SKF Microlog data collector and FFT analyzer make it possible to collect data for any TBM, eg on a monthly basis. The weight of the Microlog is only 2.3 kg and it is therefore easy to handle, also in the sometimes narrow space around the machine in the tunnel. Sensors are mounted at suitable measuring points, as close as possible to the loaded zone of the bearing. From those, the signals are transferred by electrical cables to a common box for easy and expedient data collection.

The signals can be analyzed directly by means of the Microlog, but they can also be copied from the Microlog to a PC for hard disk storage and analysis with the aid of SKF's software package PRISM^2. Apart from very high frequency vibration measurements, the Microlog can also be used to monitor low frequency vibrations, eg in the range of 0 - 20 kHz. Those signals can be enveloped again and subjected to FFT-analysis and provide a valuable contribution towards predicting bearing failures.

The principal advantage of SEE is that it allows discovering bearing damage at a very early stage. By measuring low frequency vibrations – which are enveloped and FFT-analyzed – bearing defects can then be followed up as and when they grow in size. In this manner the technique allows judging how much a defect has expanded since earlier measurements. The four most recently delivered Mk 27 TBMs have all been provided with the necessary equipment for Microlog monitoring.

CONCLUSION

Over the past four decades, TBMs have come a long way towards becoming the preferred tool for driving tunnels also in very hard and abrasive types of ground. This progress was possible thanks to the development of more powerful and wear resistant cutter tools. They in turn required the application of special cutterhead main bearing arrangements with steadily increasing capacities. Careful specification of the load spectrum for those bearings is a prerequisite for a successful design.

No TBM is more reliable than its main bearing. This obvious truth shows the importance not only of careful bearing design, but also of providing the bearing with a proper working environment in the form of dependable sealing and lubrication systems.

Even when all those conditions have been met, one cannot just take things for granted during operation of the machine. Periodic analysis of the lubricant and modern monitoring systems make it possible to regularly keep an eye on the bearing's condition, so that the TBM owner can keep the situation in hand, instead of having to live in fear of unexpected breakdowns.